REABE DESIGN LLC

Hopper & Boom Gauge

Hopper Quantity and Boom Pressure Gauge Users Manual

Rev 0

Troy Reabe

10/7/2010

This manual is intended to guide the user of the gauge through installation and normal operation of the gauge. There is also a short trouble shooting section.

Contents

Parts List

The kit comes with the parts listed and displayed below:

- (1) Main Box

- (1) Quantity Probe

- (1) Probe Float

- (1) Pressure Probe

- (1) Quantity Probe Cable

- (1) Pressure Probe Cable

- (1) Power and Ground Sense Cable

- (1) Users Manual (this book)
- (1) Aircrafts Install Drawing

Optional equipment

(Included with use of remote box)

- (1) Remote Box

- (1) Remote Connection Cable

Balloon Images when Display Set Final

Setup/Installation

Mounting Components

Mounting the Quantity Probe

Drill the holes and mount the probe into the location shown on your aircrafts install drawing

Mounting the Pressure Probe

Plumb the probe into the location shown on your aircrafts install drawing

Mounting the Main Box

The main box can be mounted in the dash using the template supplied, or mounted above the dash using a bracket like the one drawn in the template.

Mounting the Remote Box

The remote box has the same mounting holes and cutout as the main box.

Running the Cables

Try and run the cables away from high power lines such as: Air conditioner, Blower, motor, pump, or main buss lines. If a cable must pass one of these lines try and pass at a right angle.

Cable Connections

Quantity Probe Connection:

To connect the Quantity probe to the main box you use the Quantity Probe Cable, You can identify this cable because it is the only one with a **90 degree connection**. The end with the 90 degree connection connects to the top of the quantity probe. The other end of the cable connects to the back of the main box to the port labeled “QTY GAUGE”.

Power and Ground Sense Cable Connection:

To connect the power to the main box you use the Power and Ground Sense Cable, You can identify this cable because it is the only that has a connector only on one end.
Connections to aircraft:

Black	connects to aircraft Ground
Blue	connects to +12V or +24V through a .5 amp breaker or fuse
Brown	connects to the Torque sense side of the Hobbs meter

The other end of the cable connects to the back of the main box to the port labeled “POWER”.

Pressure Probe Connection:

To connect the Pressure probe to the main box you use the Pressure Probe Cable, You can identify this cable it will be the **larger diameter cable with 4 pins** in the male end. The female

end of the cable connects to the Pressure Probe. The other end of the cable connects to the back of the main box to the port labeled “PRES GAUGE”.

Remote Box Connection:

To connect the Pressure probe to the main box you use the Pressure Probe Cable, You can identify this cable it will be the **smaller diameter cable with 4** pins in the male end. The female end of the cable connects to the Remote Box. The other end of the cable connects to the back of the main box to the port labeled “REMOTE”.

.

Dip Switch Settings

If you ordered the kit for a specific configuration the unit will be preset for that configuration. To check dip switch setting without opening the box refer to the “Display Settings Info” section. The Main box is the same for all aircraft. The way the box is set for a particular aircraft is thru the dip switch settings.

To change the dip switch setting take the four screws out of the back of the main box. You will now be able to slide the main board and back out of the box. On the top of the main board you will see a series of dip switches, the switches are labeled and switch 1 should be closest to the display board.

Setting the switches:
Switch 1 is used to select English or Metric unit, when switch 1 is turned Metric is selected.
The other switches are used to select the air craft you have. Refer to the table for the settings for your aircraft.

Plane	Sub tank	Info Display	Switch 2	Switch 3	Switch 4	Switch 5	Switch 6	Switch 7
502	AG	502	OFF	OFF	OFF	OFF	OFF	OFF
400	AG	400	ON	OFF	OFF	OFF	OFF	OFF
502	Fire	F502						

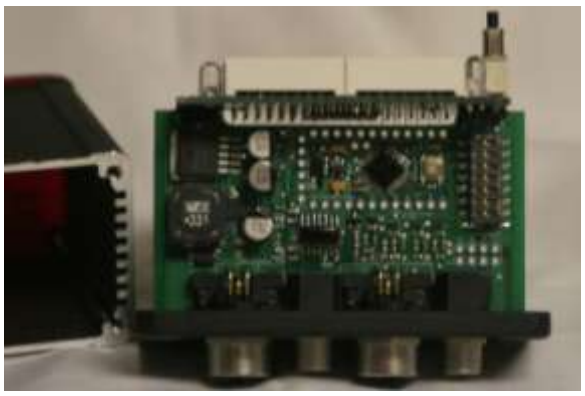

Operation

Normal Operation/ Screen Dimming

During operation the display will show the boom pressure reading on the upper line and the hopper quantity on the lower line. There are two green LEDs in the display; one is in the lower right hand side of the display is used to show when the quantity is set to ground mode, the LED is labeled “GROUND”, the other is in the upper left hand side of the display is used to show a negative pressure in the boom, the LED is labeled “SUCKBACK”.

Display Settings Info

To see what the Dip Switch settings are hold down the DIM button when the box is powered on. The box will then display the Firmware Version, Units, and Aircraft Settings.

Trouble Shooting

All kits are assembled and tested before being sent out but in the case that the unit is not working correctly here are a few quick tips.

If the unit is not powering on check the supply for the box. Make sure you have the black to ground and the blue to power.

If you get an Erro on either line of the display this is saying that sensor is out of range. If the Erro is on the pressure line the error is with the pressure probe. The error normally caused by a bad connection or sometimes the cable, check your connections and make sure you did not kink you cable when running it. You can check the continuity of you cable with a multi meter to verify if it is the cable.

Further Questions Please email

ReabeDesign@gmail.com

or Call

84 R PLANE 49

(847) 752-6349

Dash Mount Template

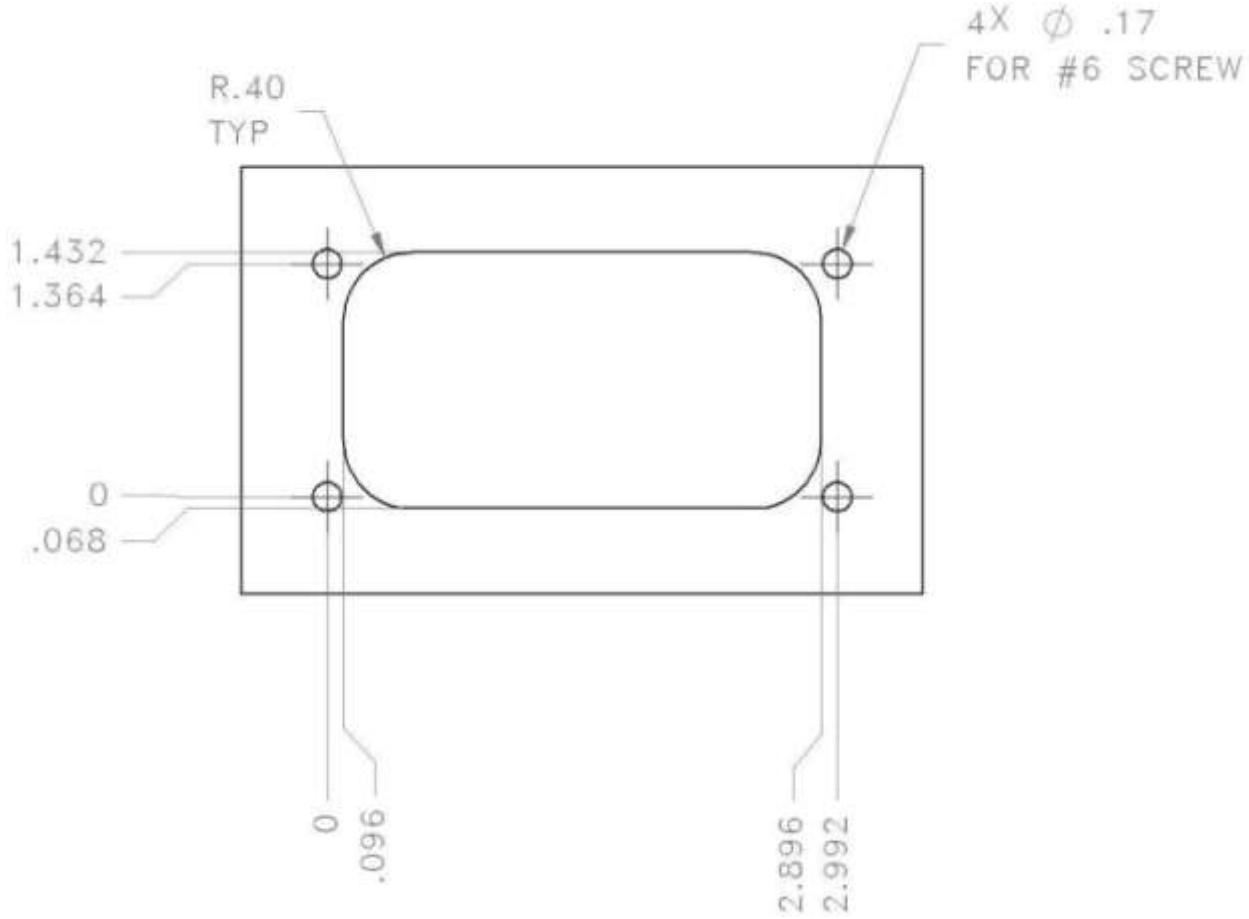

Check Scale and update to include old cutout.